Assessing Shear Strength of Lightweight Concrete Beam Reinforced with Glass Fiber Reinforced Polymer Bars

Emma Kielmeier, Lucas Roy, Waleed Safdar, Cameron Hodson, Mathew Greene , Brendan Morrow and Saeid Haji Ghasemali , (Undergraduate Research)

FRPRCS-16 2024 Poster Session, March 23, 2024, New Orleans, LA, USA

Abstract: Glass Fiber Reinforced Polymer (GFRP) is gaining traction as a steel bar substitute in construction due to its lightweight, rust-resistant, and high tensile strength properties. Its use not only reduces maintenance but also prolongs the lifespan of concrete structures. Combining GFRP with lightweight concrete produces sturdy yet lightweight building elements, offering significant load support with minimal weight. However, research on GFRP in lightweight concrete is limited. This study focuses on evaluating the shear strength of GFRP-reinforced lightweight concrete beams, aligning with Canadian codes CSA and ACI FRP guidelines. The investigation compares shear strength with CSA and ACI FRP Codes, shedding light on potential advantages and environmental implications, notably the carbon footprint, of integrating GFRP into lightweight concrete.

Research Objective

- Address the lack of available shear and flexural strength data due to shear and Flexural failure in the beams.
- Contribute empirical data to enhance understanding of GFRP-reinforced LWC shear behavior, particularly in the absence of specific ACI guidelines.

Test Setup and Procedure

Table 1. Material property of the GFRP bar

Diameter (mm)	Area (mm^2)	E_f (MPa)	F_{fu} (MPa)
10	71	60000	1000

- Beam Size: 978mm long, 70mm wide, variable depths, single 9.5mm GFRP bar
- Test Method: Four-point bending.

Table 2. Beam Details

Beam	Span Length (mm)	Loading Span (mm)	Beam height (mm)	Compressive Strength (MPa), 28 days	Unit Weight (kg/m^3)
1	610	203	114	25.5	2063
2	950	250	102	33.42	1912

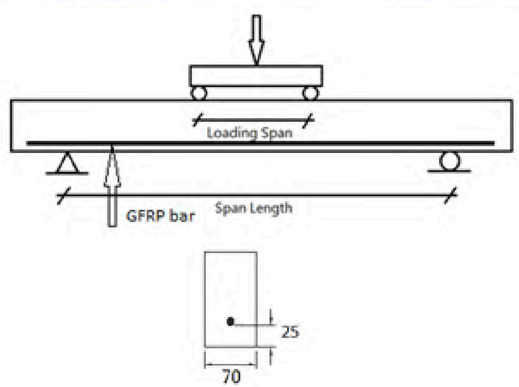

Fig. 1. Test Setup

Experimental Results

- Typical shear failure shapes are shown in Fig. 2. Diagonal-tension failure and shear-tension failure were observed in each beam, attributed to the absence of shear reinforcement. The failure events for all beams were sudden but not cata-strophic, occurring on one side of the beam either at the left or right support..

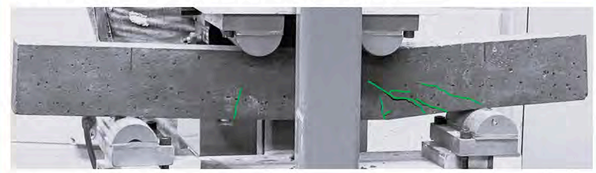

Fig. 2 Typical Shear Failure with diagonal crack pattern (Green line).

- Design Codes Comparison: CSA S806-17 and ACI 440.11-22 differ in considering lightweight concrete's shear strength.
- CSA S806-17 Approach: Utilizes a modification factor (λ) of 0.85 for Structural semi-low-density lightweight concrete
- ACI 440.11-22 Exclusion: Lacks provisions for lightweight concrete due to insufficient data, using ACI-318-22's λ value as an approximation.
- Experimental results for all beams are summarized in Table 3. In this table, Vu represents the shear strength obtained from the experimental results, calculated as Pmax/2.

Table 3 Test results

Beam	P_{max} (kN)	V_u (kN)
1	9.14	4.57
2	9.24	4.62

- Shear failure occurred prior to reaching the flexural strength, impeding a direct comparison with code results. Consequently, there was no possibility to compare the test results with the codes for flexural strength.

Conclusions

- Shear failures occurred due to lack of reinforcement, mainly near the support.
- CSA predicted a higher shear strength than the test results for beam 1, suggesting a need for adjustments in determining λ..
- ACI underestimated shear strength for lightweight concrete, rec

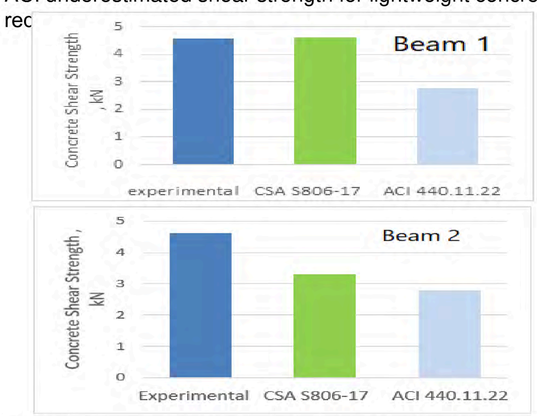

Fig. 3. Comparison of Tests and Codes predicted ultimate shear strength

- CSA-S806-2017 and ACI 440.11-22 show similar flexural strength values, with ACI representing 94% of CSA's value.
- Further research needed for accurate lightweight concrete equations and comprehensive GFRP design guidelines.

Acknowledgements

- We extend our gratitude to MST Bar for generously donating GFRP bars for our research.

References

- Wiater, A., Siwowski, T.: Serviceability and ultimate behavior of GFRP reinforced lightweight concrete slabs: Experimental test versus code prediction. Composite Structures Volume 239, 112020, 2020.
- Mehany, S., Mohamed, H.M., Benmokrane, B.: Contribution of lightweight self-consolidated concrete (LWSCC) to shear strength of beams reinforced with basalt FRP bars. Engineering Structures 231 111758, 2021.